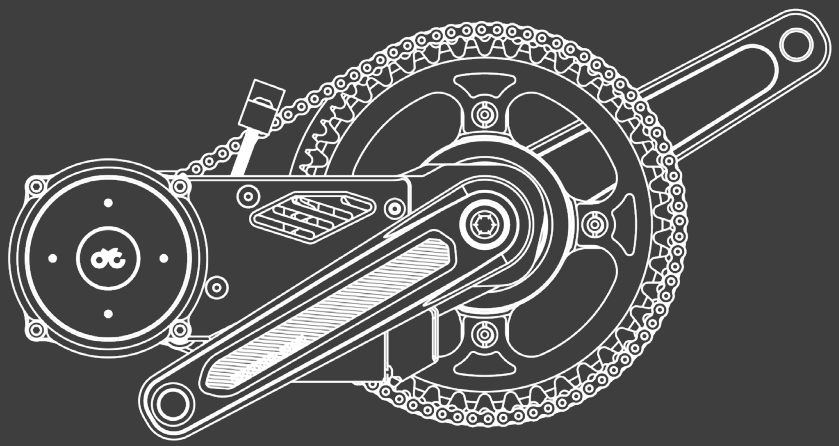

CYCMOTOR LTD.

X1 PRO

GEN 3 USER MANUAL

00 TABLE OF CONTENTS

01 SAFETY & PRECAUTION

- General Safety
- Before the Ride
- Installation & Use
- Disclaimer

02 SPECIFICATIONS

- Description
- Specifications
- Parts List
- Dimensions
- 68/ 73/ 83mm version
- 100/ 120mm version
- BB92 version
- Motor, Controller & Gearbox

03 SPECIFICATIONS

- Required Tools
- Operating Notice
- Mounting Options for Controller
- Adjusting the Width of the Bottom Bracket
- Installation of 63/ 73 & 83mm version
- Installation of 100/ 120mm version
- Installation of BB92 version
- Wiring & Connection

04 MOBILE APP & DISPLAY

- Ride Control App User Guide
- SW102 Display User Guide
- DS103 Display User Guide

05 QUICK START

06 MAINTENANCE

07 TERMS & CONDITIONS

- Warranty
- Contact Information

01 SAFETY & PRECAUTION

General Safety

Kindly read through the entire user manual. This manual contains important information to reduce user risk as well as instructions for this product's proper use. Do not discard the manual but keep it for reference.

Note that the user's personal safety remains the user's responsibility and that the user must contact CYCMotor Ltd or their official product dealer directly for any further guidelines or assistance.

Never interfere with the movable parts when the drive unit is connected to a power supply. This could result in serious injury if the system is accidently engaged.

This product is a powerful motor system that is dangerous for children and must be handled by an adult at all times. Small components and accessories may also present a choking hazard. Keep the motor system and accessories out of reach from children.

All components and accessories may only be replaced with identical components directly supplied by CYCMotor Ltd or an official product dealer. CYCMotor Ltd cannot be held liable for any damages as a result of using unapproved parts.

This product only complies with local, state, and federal regulations if speed limits are set accordingly. Ensure that you have set up your X1 Stealth kit according to your loca, state, and federal regulations when using and registering this drive unit on a public road/area.

Before the Ride

Ensure that the drive unit chain has the proper tension. Incorrect tension could cause jamming of the system and result in injury while riding. Inspect the chain tension regularly.

Ensure that the chains are properly lubricated. Cleaning and lubricating your chain with regular bicycle chain cleaner, is advised regularly.

When connecting a power supply, make sure that the power supply is completely connected. Faulty connection could result in a short circuit and damage the controller or batteries.

Inspect all electrical wires and plugs for damage regularly.

Secure all wires properly. Ensure that no loose wires are dangling from the bike that could be jammed into any movinf parts.

Before turning on the system, ensure that the throttle can be twisted freely without friction and that the throttle can return to its original position withour restriction. This is to prevent any uncontrolled response of the system.

01 SAFETY & PRECAUTION

Installation & Use

Do not install anything other than the parts and accessories that came with this drive unit. Doing so could damage the product.

The drive system can be activated and deactivated by holding down the on/off button the display.

Avoid changing the bke gear (note: this is different from the drive unit's assist level) while the drive unit is powering the bike. This may lead to excessive wear on the chain and chain rings or other gear related failture.

When changing gear, use human input only. After the gear is changed, you may accelerate again with the throttle or continue using the PAS.

Take off with the appropriate assist level & bike gear.

This product is splash proof and rain proof but NOT WATER PROOF. Do not submerge it underwater.

Disclaimer

If you require any more information or have any questions about the user manual disclaimer, please feel free to contact us via email at support@cycmotor.com or call +852 3690 8938.

All the information contained in this user's manual is published in good faith and for general informational purposes only. CYC Motor Ltd does not make any warranties about the completeness of this information and encourages further inquries as stated above if needed. CYC Motor Ltd will not be held liable for any losses and/or damages in connection with the use of this product. The use of this product is at the user's own risk.

Notice: Please contact CYC Motor Ltd if you are unsure about the assembly instructions or for any further assistance as CYC Motor Ltd will be held liable for any losses and/ or damages created by the assembly.

02 SPECIFICATION

Description

This product is a high-powered electric bike (ebike) drive unit kit which includes a programmed control unit and peripherals. This product is designed to be installed as a conversion system to convert standard bicycles into electric bicycles.

Specifications

Rated Voltage	**36 - 72V**
Max. RPM at Crank	**>300 RPM**
Rated Power	**3500W (CYC X6) / 5000W (CYC X12)**
Max. Rated Torque at Crank	**150 N.m. (CYC X6) / 250 N.m. (CYC X12)**
Overall Efficiency	**>90%**
Colour	**Anodized Black**
Weight of Motor & Controller	**3.8kg**
Total Weight with Crank set & BB	**5.6kg**
Bracket Materials	**7075-T6**
Crank Arm Length	**165mm or 175mm**
Q Factor	**190mm**
Control Method	**FOC**
Motor Sensor	**Hall & Temp. Sensor**
Chain ring	**11/53 option with 32T** **11/63 option with 38T** **11/72 option with 40T**
Compatibility	**68-83mm, 100mm, 120mm** **BSA & Pressfit version available**

Parts List

X1 Pro motor & chain-reduction assembly

SW102 or DS103 Display

Thumb, Half-Twist or Full Throttle

Magnetic Bluetooth Speed Sensor

Bottom Bracket Spacers (3, 5 & 7mm for BSA version; 2mm (2pcs) for BB92 version)

Magnetic Brake Sensors (optional)

Controller Extension Wires (optional)

Headlights (optional)

Dimensions

BSA Threaded 68/73/83mm Version

A	94mm
B	253mm
C	140mm/165mm/190mm
D	177.9mm
E	165mm/175mm
F	82.9mm
G	62.5mm
H	83mm
I	47.5mm
J	55.3mm
K	70.6mm
L	81.81mm
M	91.6mm
N	107.1mm

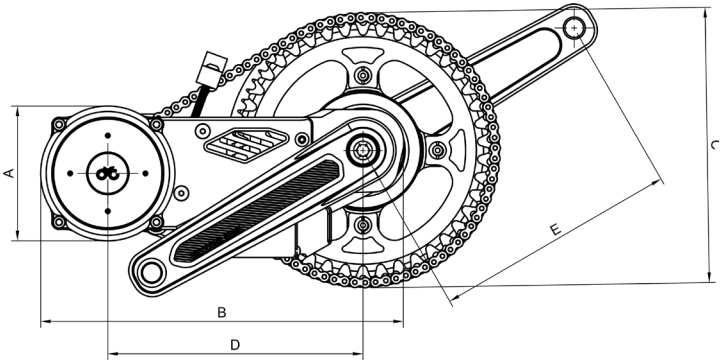

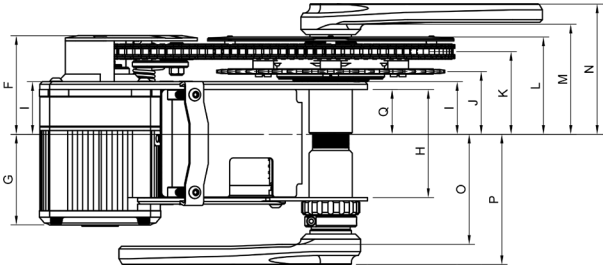

***For BSA Threaded 68mm & 73mm Version:
Bottom Bracket Spacers (3/ 5/ 7mm) needs to be added.
(Refer to 03-Installation: Adjusting the Width of Bottom Bracket)

Dimensions

BSA Threaded 100mm Version

A	94mm
B	253mm
C	140mm/165mm/190mm
D	177.9mm
E	170mm
F	91.4mm
G	54mm
H	100mm
I	56mm
J	63.8mm
K	79.1mm
L	90.3mm
M	100.1mm
N	115.6mm

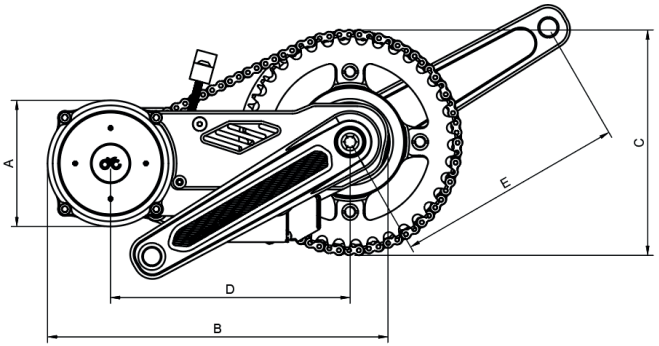

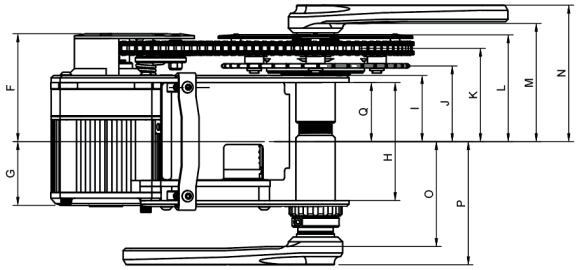

***For BSA Threaded 68mm & 73mm Version:
Bottom Bracket Spacers (3/ 5/ 7mm) needs to be added.
(Refer to 03-Installation: Adjusting the Width of Bottom Bracket)

Dimensions

BSA Threaded 120mm Version

A	94mm
B	253mm
C	140mm/165mm/190mm
D	177.9mm
E	170mm
F	101.4mm
G	44mm
H	120mm
I	66mm
J	73.8mm
K	89.1mm
L	100.3mm
M	110.1mm
N	125.6mm

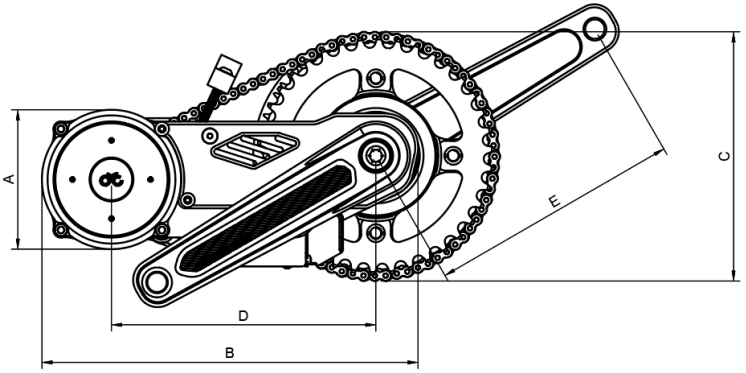

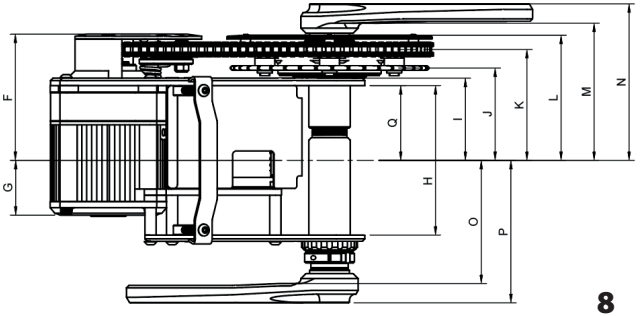

***For BSA Threaded 68mm & 73mm Version:
Bottom Bracket Spacers (3/ 5/ 7mm) needs to be added.
(Refer to 03-Installation: Adjusting the Width of Bottom Bracket)

Dimensions

BB92 Version

A	94mm
B	253mm
C	190mm
D	177.9mm
E	170mm
F	79.4mm
G	66mm
H	92mm
I	44mm
J	52.3mm
K	67.1mm
L	78.6mm
M	97.1mm
N	112.6mm

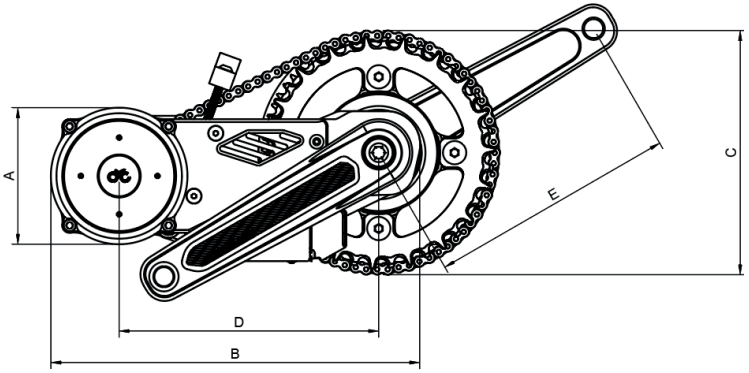

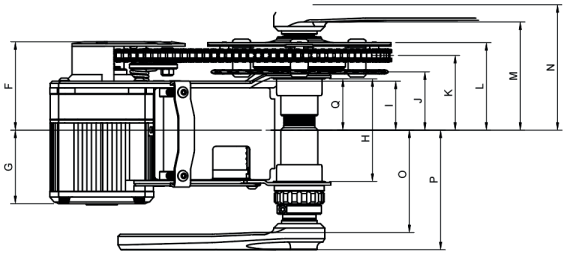

***Bottom Bracket Spacers (2mm x2pcs) included if necessary

Motor

Motor Type	BLDC Out-runner
No-load Motor Kv	150
Stator Lamination	0.2mm
Magnet	N45UH (> 180°C)
Efficiency (at 2N.m.)	> 93%
Rated RPM (at 2N.m.)	> 9000 RPM
Epoxy sealed	Black Epoxy Potted Stator

Controller

Type	CYC X6 / X12 Controller
Rated Voltage	36V - 72V
Max. Input Current	65A
Bluetooth	BLE
Mobile App	CYC MOTOR (BAC) App for iOS & Android
Mounting Position	Integrated between Bottom Bracket/ Mounted Separately

Gearbox

First Stage Reduction Ratio	1: 6 Planetary Gear Harden Steel Sun & Ring Gear
Second Stage	219H Chain
Overall Reduction Ration (Motor to Crank)	1: 28.9 (11/53T) 1: 34.4 (11/63T)

Required Tools

Hex Keys (2.5mm & 10mm)

Adjustable Wrench

Crank Puller

Press Fit Bottom Bracket Removal Tools
(Only for BB92 version)

Ø16 Notch Bottom Bracket Tool

20 spline Bottom Bracket
Tool

Operating Notice

RIGHT-HAND and LEFT-HAND sides are determined by the bike handle; Right-hand corresponds to the right handle.

Mounting Options for Controller

The CYC X6 controller can be mounted below the bottom bracket (pre-assembled by default) or mounted elsewhere on the bicycle frame at the user's discretion using controller extension wires that can be selected upon purchase or bought separately from the CYC online store or an authorized dealer.

NOTE: The controller comes pre-assembled at the bottom bracket between the mounting plates.

Adjusting the Width of Bottom Bracket

In order for the X1 Stealth to fit on various different widths of bottom brackets, there are several spacers that come with the kit. These spacers are designed to provide the bottom brackets with necessary spacing between the X1 Stealth brackets.

The preferred mounting set-ups are shown on the next page for 68mm and 73mm bottom brackets. Note that the spacers can be adjusted to accommodate different chain lines as needed.

Before you begin, ensure that you have removed the original crankset and bottom bracket from your frame. This includes any bearings and/ or cups that might have been fitted previously. To install your CYC kit, you will need a clean bottom bracket shell on your frame.

*68mm bottom brackets require a 7mm and a 5mm spacer on the left (non-drive side) and a 3mm spacer on the right (drive side) as shown.

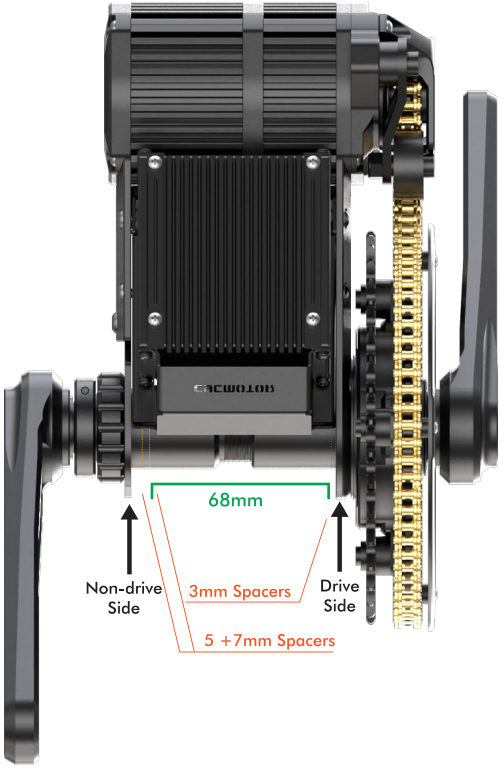

*73mm bottom bracket requires a 7mm & 3mm spacer on the left (non-drive side) and no spacer on the right (drive side) as shown.

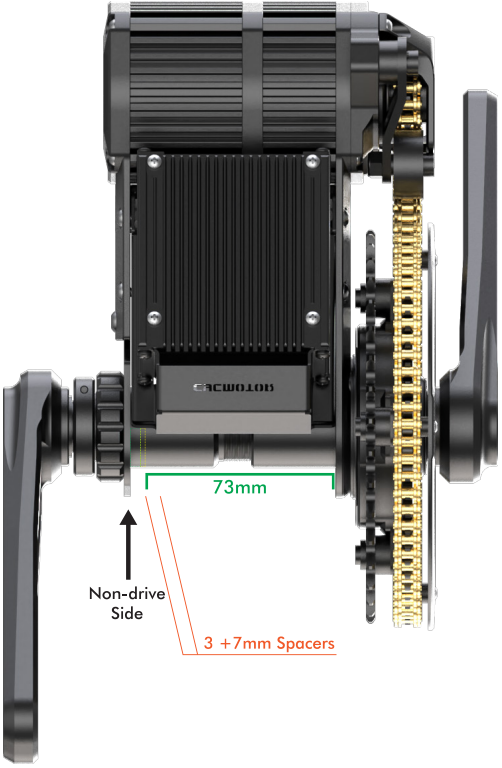

Installation of 68/73/83mm version

01. Remove the bolt as indicated within the circle in order to loosen the left (non-drive) side mounting bracket. Gently swing the left mounting bracket upward and line up the motor body with your frame at the bottom bracket. Insert the right (drive) side of the motor into the frame's bottom bracket shell. Once positioned over the frame's bottom bracket, swing the left mounting bracket back down and reinsert the respective bolt accordingly.

02. Line up the 3, 5, and/ or 7mm bottom bracket spacer/s provided outside the adaptor bracket plate on the left (non-drive) side of the frame (spacer guidelines mentioned below). Thread the left (non-drive) side bottom bracket cup into the frame's bottom bracket shell through the spacer/s and the mounting bracket. Rotate clockwise.

    a. For a 68mm bottom bracket shell, place the 5mm & 7mm bottom bracket spacer over the left (non-drive) side bottom bracket cup before inserting it into the frame's bottom bracket shell.

    b. For a 73mm bottom bracket shell, place the 3mm & 7mm bottom bracket spacer over the left (non-drive) side bottom bracket cup before inserting it into the frame's bottom bracket shell.

    c. For an 83mm bottom bracket shell, there is no need to add in any bottom bracket spacers on the left (non-drive) side.

*Kindly note that the bottom bracket spacer placement mentioned above are provided as guidelines only for most general frames. You may place spacer/s on either side of the bottom bracket cups according to your desired chainline.

01.

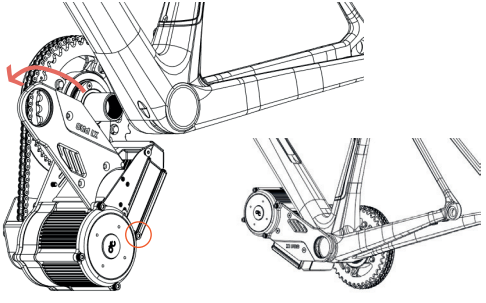

02.

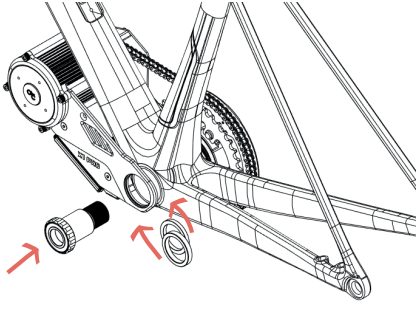

Installation of 68/73/83mm version

03. Insert the spindle from the right (drive) side. Note that you will need to line up the splines with the chainring assembly. If your spindle does not go through or comes to a hard stop before being fully inserted, rotate the spindle a bit and try again. Once the spindle is lined up, a soft tip hammer may also be used to get the spindle all the way through.

04. On the left (non-drive) side, thread in the lock ring. Use a 3mm hex key to lightly thread in the lock ring further via the small hole. Lightly tighten the lock ring.

05. Install the motor hanger (see page 22) and place the rubber padding provided in between the motor and the frame.

03.

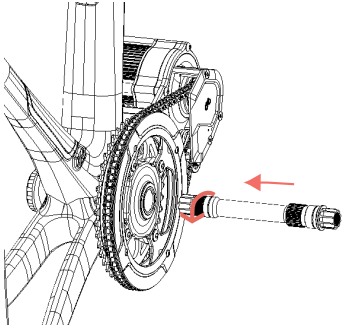

04.

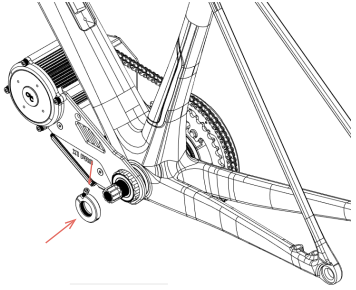

05.

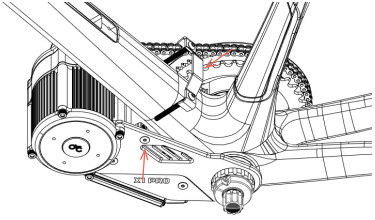

Installation of 68/73/83mm version

06. Insert spindle spacers on the spindle on the right (drive) side. Place the spindle spacer in between the left (non-drive) side crank arm and the lock ring before installing the crank arms.

07. Install the left (non-drive) and right (drive) side crank arm according to the L and R indication on your crank arms. Use the M15 ISIS crank arm screws to tighten and secure the crank arms.

08. Place your bicycle chain over the inner chain ring. Note that you will need to undo the quick-link to split your chain.

09. Connect the peripherals (see page 23) and your battery.

10. Test run and have fun! Use responsibly.

06.

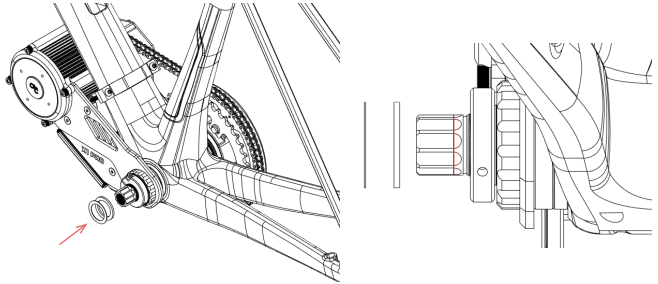

07.

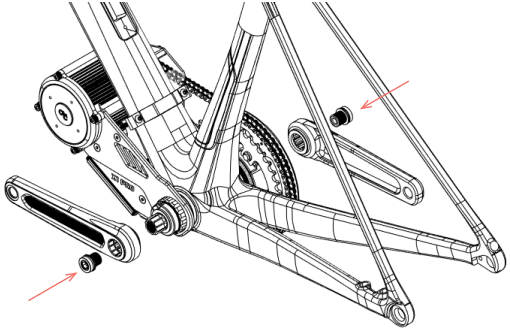

Installation of 100mm & 120mm version

01. Remove the bolt as indicated within the circle in order to loosen the left (non-drive) side mounting bracket. Gently swing the left mounting bracket upward and line up the motor body with your frame at the bottom bracket. Insert the right (drive) side of the motor into the frame's bottom bracket shell. Once positioned over the frame's bottom bracket, swing the left mounting bracket back down and reinsert the respective bolt accordingly.

02. Thread the left (non-drive) side bottom bracket cup into the frame's bottom bracket shell through the spacer/s and the mounting bracket. Rotate clockwise.

*If applicable, line up the 3, 5, and/ or 7mm bottom bracket spacer/s provided outside the adaptor bracket plate on the left (non-drive) side of the frame (spacer guidelines mentioned below).

*Kindly note that the bottom bracket spacer placement mentioned above are provided as guidelines only for most general frames. You may place spacer/s on either side of the bottom bracket cups according to your desired chainline.

01.

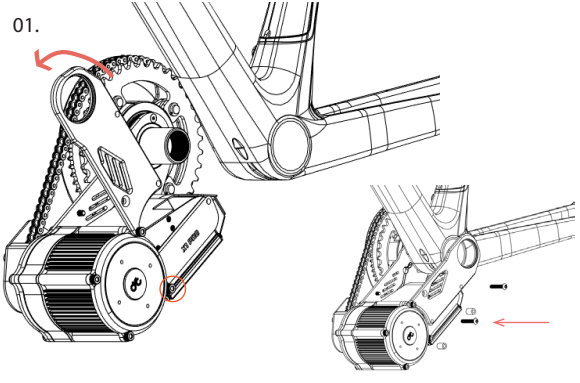

02.

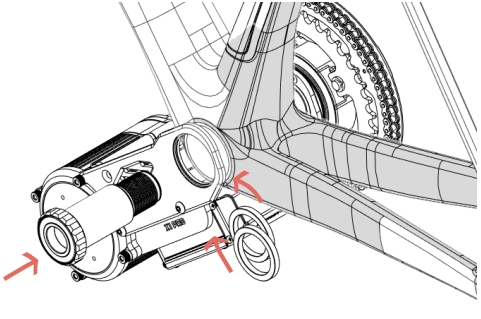

Installation of 100mm & 120mm version

03. Insert the spindle from the right (drive) side. Note that you will need to line up the splines with the chainring assembly. If your spindle does not go through or comes to a hard stop before being fully inserted, rotate the spindle a bit and try again. Once the spindle is lined up, a soft tip hammer may also be used to get the spindle all the way through.

04. On the left (non-drive) side, thread in the lock ring. Use a 3mm hex key to lightly thread in the lock ring further via the small hole. Lightly tighten the lock ring.

05. Install the motor hanger (see page 22) and place the rubber padding provided in between the motor and the frame.

03.

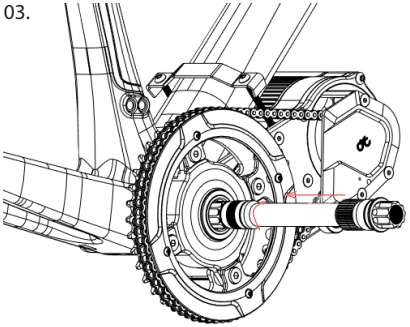

04.

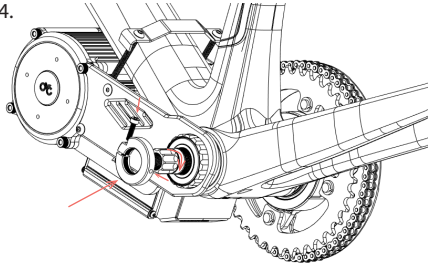

05.

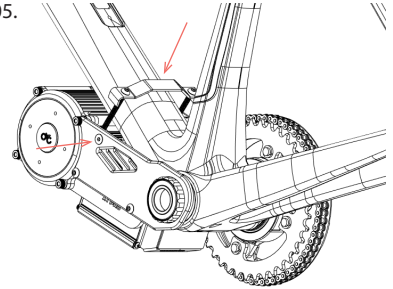

Installation of 100mm & 120mm version

06. Insert spindle spacers on the spindle on the right (drive) side. Place the 120mm spindle spacer in between the left (non-drive) side crank arm and the lock ring before installing the crank arms.

07. Install the left (non-drive) and right (drive) side crank arm according to the L and R indication on your crank arms. Use the M15 ISIS crank arm screws to tighten and secure the crank arms.

08. Place your bicycle chain over the inner chain ring. Note that you will need to undo the quick-link to split your chain.

09. Connect the peripherals (see page 23) and your battery.

10. Test run and have fun! Use responsibly.

06.

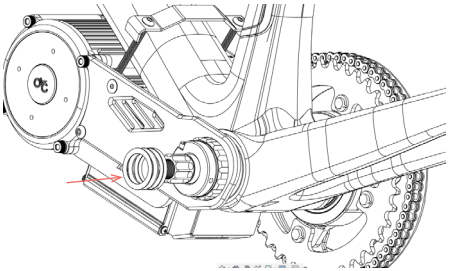

07.

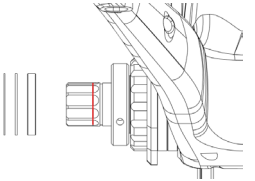

08.

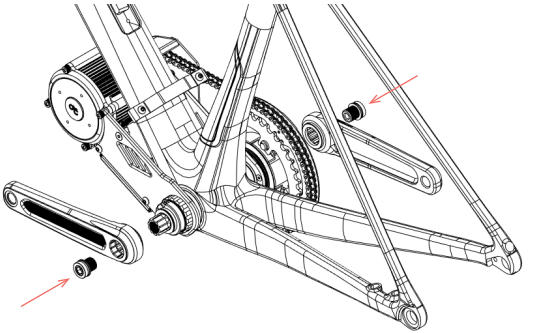

Installation of BB92 version

01. Insert the BB92 to BSA adapters provided to the frame's bottom bracket shell. Use a pressfit installation tool to insert the adaptors.

02. Line up the motor body with your frame at the bottom bracket and insert the right (drive) side of the motor into the frame's bottom bracket shell.

03. Add 2 x M5*6 screws into the left (non-drive) side adaptor plate and the mounting bracket.

04. Add the 5mm bottom bracket spacer provided outside the adaptor bracket plate on the left (non-drive) side of the frame. Thread the left (non-drive) side bottom bracket cup into the frame's bottom bracket shell through the spacer and the adaptor bracket plate. Rotate clockwise.

05. Insert the spindle from the right (drive) side. Note that you will need to line up the splines with the chainring assembly. If your spindle does not go through or comes to a hard stop before being fully inserted, rotate the spindle a bit and try again. Once the spindle is lined up, a soft tip hammer may also be used to get the spindle all the way through.

01.

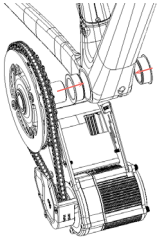

02.

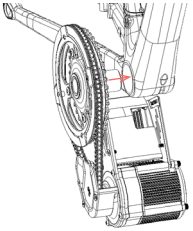

03.

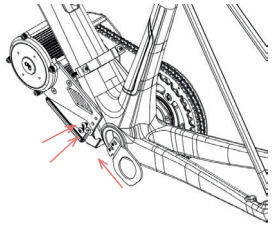

04.

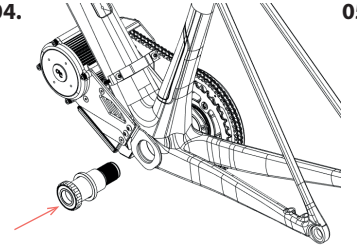

05.

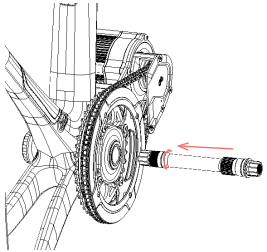

Installation of BB92 version

06. On the left (non-drive) side, thread in the lock ring. Use a 3mm hex key to lightly thread in the lock ring further via the small hole.

07. Install the motor hanger (see page 22) and place the rubber padding provided in between the motor and the frame.

08. Insert spindle spacers on the spindle on the right (drive) side. Place the 200mm spindle in between the left (non-drive) side crank arm and the lock ring before installing the crank arms.

09. Install the left (non-drive) and right (drive) side crank arm according to the L and R indication on your crank arms. Use the M15 ISIS crank arm screws to tighten and secure the crank arms.

10. Place your bicycle chain over the inner chain ring. Note that you will need to undo the quick-link to split your chain.

11. Connect the peripherals (see page xxx) and your battery.

12. Test run and have fun! Use responsibly.

06.

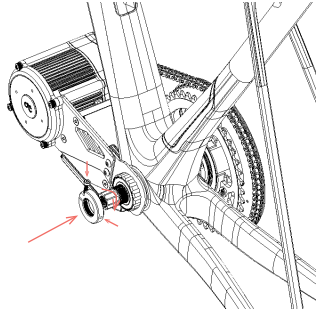

07.

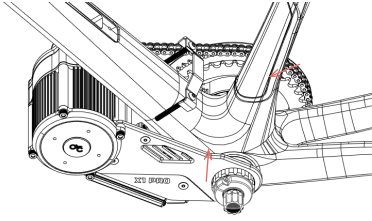

08.

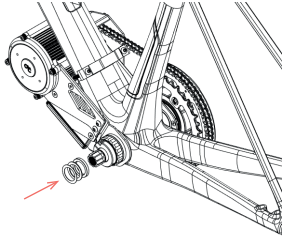

09.

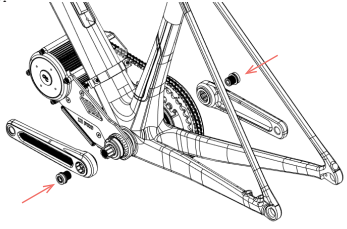

Mounting the Hanger

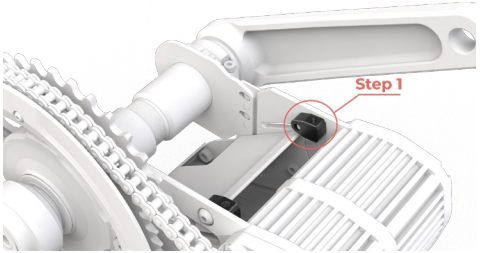

01. Place 1 of the aluminium joints on the inside of the bracket & screw in the bolt to attach it to the motor's mounting plate.

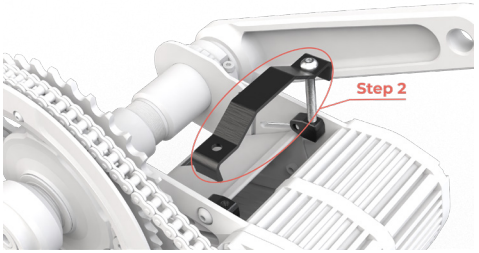

02. Position the hanger over the bike's frame & screw in the hanger to the aluminium joint loosely.

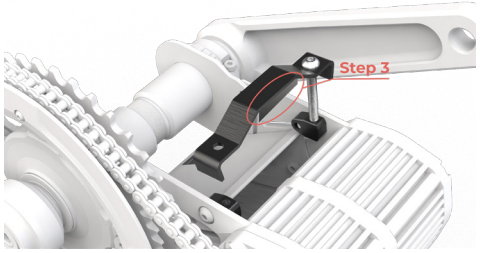

03. Insert the rubber piece provided between the frame & the bracket.

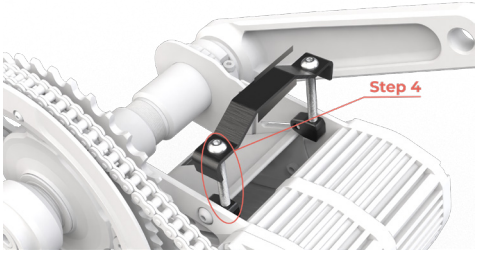

04. Place the 2nd aluminium joint on the other side of the mounting bracket & connect the hanger fully. Tighten the hanger to ensure that the motor is secured.

Wiring & Connection

Connect your controller to the following connectors as per below:

1. Connect the peripheral connector (P1) to the 1-2 or 1-4 wiring harness
2. Connect P2 to the speed sensor
3. P3 & P4 will already be connected when the motor is received

For brake sensors:
Please note if you purchased brake sensors separately, you will need to enable them on the CYC Ride Control app.

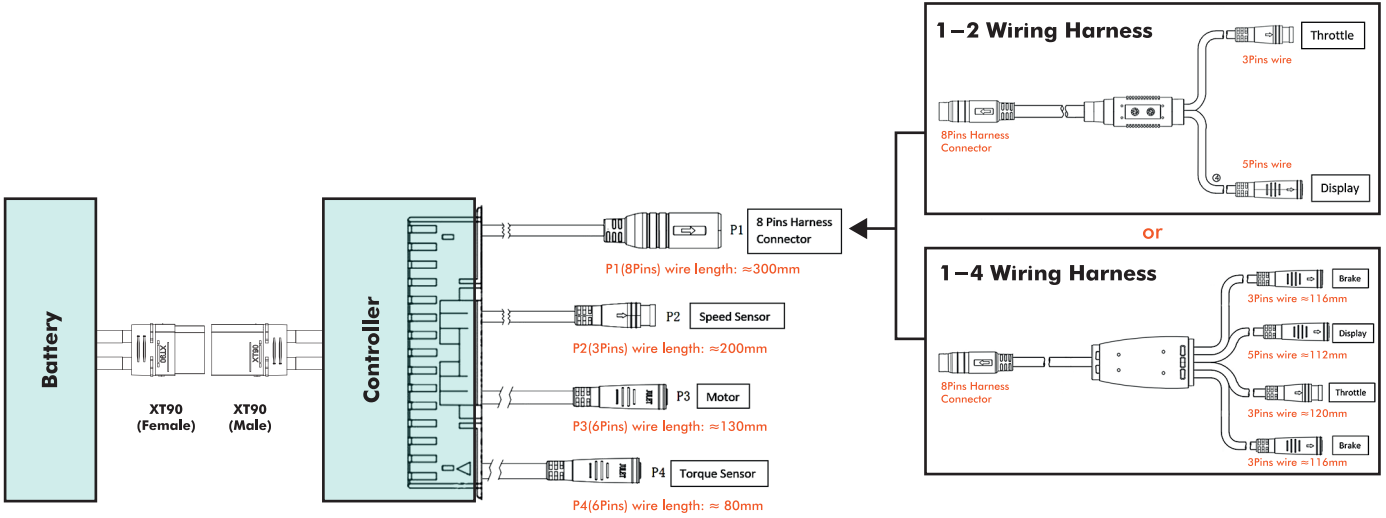

04 MOBILE APP & DISPLAY

Kindly download the display & mobile app user manuals in our Downloads page (cycmotor.com/cycmotor-downloads) or scan the QR code. All materials listed below are freely available to download on the CYC website.

Included in this link:

- Brochure
- User Manual
- Ride Control App User Guide
- SW102 Display User Manual
- DS103 Display User Manual
- Speed Sensor Installation Guide
- Brake Sensor Installation Guide
- 1:1 printouts for mounting reference

INTRODUCTION

CYC RIDE CONTROL

Monitor & customize your e-bike riding experience for all CYCMOTOR mid-drive systems. Use it as a secondary dashboard, settings set-up, or both. Unleash all the possibilities of e-bike customization at your fingertips.

The mobile app is not the only way to customize your system. The controller is also programmable via the included display- integrated for your convenience.

This platform is your go-to-station for your CYCMOTOR kit & X6/X12 controllers.

FEATURES

- Bluetooth connectivity
- Complete with torque sensor configuration
- Compatible with X6 & X12 controllers
- Real-time dashboard for all your motor & riding information
- Fully customizable parameters for pedal assist, throttle, & gear preferences

DASHBOARD

Brake sensor indicator **COMING SOON**

ALL PARAMETERS SHOW REAL-TIME INFORMATION

Warning icon to check error codes & clear faults

Bluetooth icon to connect to your device

Instantly change between **STREET** & **RACE** mode

Change between your **DASHBOARD** & **SETTINGS** page

Serial number connected to the controller

ALL PARAMETERS SHOW REAL-TIME INFORMATION

© 2022 CYCMOTOR LTD

© 2022 CYCMOTOR LTD

CONNECTING A DEVICE

STEP #1:

Open the app and tap the Search button at the bottom of the screen. Kindly ensure your phone's Bluetooth is enabled. (Please keep close to the motor while connecting)

STEP #2:

Available devices will then be listed, select your kit and it will begin connecting to the controller. (Please note signal strength)

STEP #3:

Once connected, the CONNECT icon will change stating you are connected & can select again to disconnect.

MAIN SETTINGS PAGE

The settings page allows you to navigate through different parameter categories. There are six different categories with each providing a set of adjustable parameters or readings from your ebike system.

IMPORTANT

Save all new changes in parameters to flash or risk losing progress. Any changes made that were not saved will be lost after a restart. Note to save after every change in value.

To save to flash, tap the 'Save' button in the upper righthand corner, 'Save successful' message will appear upon completion.

© 2022 CYCMOTOR LTD

© 2022 CYCMOTOR LTD

GENERAL

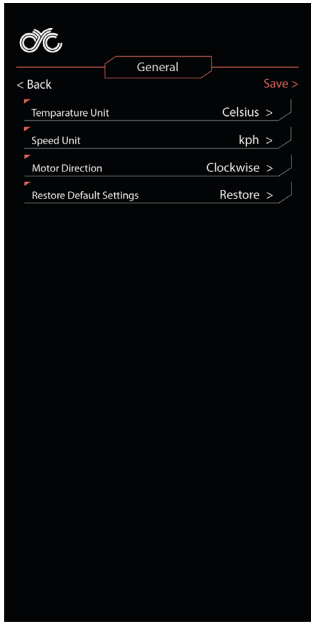

TEMPERATURE UNIT

Set your units to display in degrees Celsius (°C) or Fahrenheit (°F)

SPEED UNIT

Set the speed unit to miles or kilometers.

MOTOR DIRECTION

This setting is for users who'd want to switch the direction to where the motor is facing. Note that this is reserved for specific uses only.

WARNING: Do not change this setting if using the motor in its default position. Contact CYC for assistance.

RESTORE DEFAULT SETTINGS

Restore to factory/default settings.

MODES & LEVELS

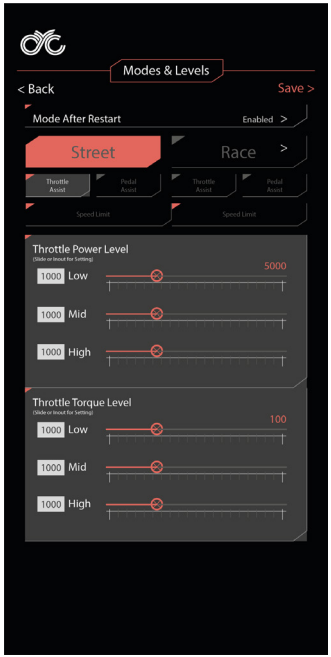

RACE & STREET MODE

You can set the throttle & PAS output independently for both modes.

RACE MODE THROTTLE & PAS

Race Mode is your "boost" or "full power" mode and has parameters set for reaching closer to the system's full capabilities. You can adjust these to your own preference within the capabilities of your controller. The default setting in Race Mode is 3000W & 100 km/hr.

STREET MODE THROTTLE & PAS

Street Mode is intended to be set to your region's legal limits. You can adjust these to your own preference or to your region's legal limits. You can adjust these to your own preference or to your region's legal limits. The default setting in Street Mode is 750W & 25Km/hr.

© 2022 CYCMOTOR LTD
© 2022 CYCMOTOR LTD

THROTTLE

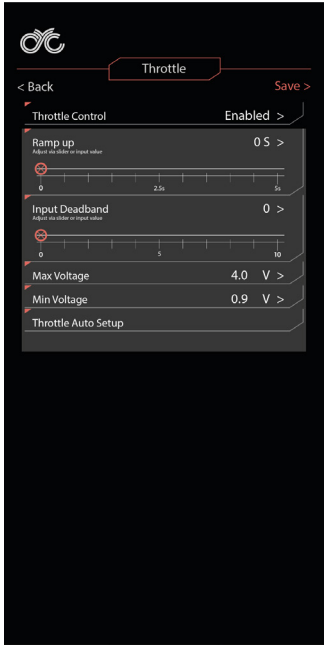

RAMPING TIME

This is the time it takes for the motor to achieve the required input. For example, if you open the throttle fully, it will take 250ms (by default) before the motor gives you full power. It will gradually ramp up to full power within the set time. We recommend not to set this below 150ms.

INPUT DEADBAND

This value pertains to opening the throttle when it's completely closed. This is the amount of throttle can be moved from the zero position without generating a response from the motor. If this value is set lower, your throttle will engage quicker and vice versa.

MAX VOLTAGE

This value should be the same as the Throttle Voltage Reading when the throttle is closed and sets the output when it is not active.

MIN VOLTAGE

This is the output of the throttle when opened fully and is pre-set when purchased. This does not need any change with CYC supplied throttles.

THROTTLE AUTO SETUP

If you'd like to use your own throttle, this will automatically setup the minimum and maximum voltage accordingly. Follow the steps as prompted on the screen.

© 2022 CYCMOTOR LTD

PEDAL ASSIST

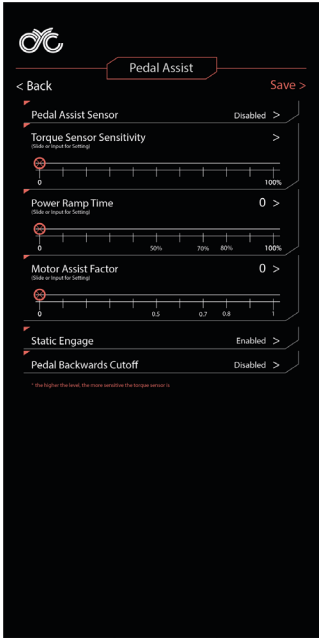

PEDAL ASSIST SENSOR

Enabling pedal assist.

TORQUE SENSOR SENSITIVITY

This value pertains to activating pedal assist when it's completely off. This is the amount of pedal force required to activate the pedal assist. If this value is set higher, your pedal assist will engage with less force and vice versa.

POWER RAMP TIME

The amount of time it takes to reach the desired input. This is the responsiveness of the motor.

MOTOR ASSIST FACTOR

This value pertains to how hard you need to pedal to get full power.

STATIC ENGAGE

This feature allows for a cadence-free pull away. i.e., only torque (40N.m.) is required to activate pedal assist.

Pedal Backwards Cutoff

This features all you to cut the motor power when you pedal backwards.

© 2022 CYCMOTOR LTD

PERIPHERALS SETUP

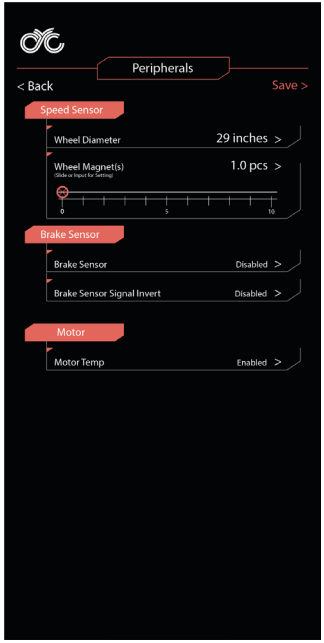

SPEED SENSOR

Wheel Diameter

The wheel diameter can be measured or calculated. We advise that this number must be calibrated so that vehicle speed within the app matches display speed. This will give more accurate speed liming under different modes.

Remember to set the correct wheel size within the display as well (only applicable to 500c & 750c displays). Kindly refer to your user manual.

Wheel Magnet

This is the number of magnets in the wheel that is communicating with the speed sensor. For more accurate vehicle speed limiting and measurement, we advise to add more magnets to the wheel.

BRAKE SENSOR

Brake Sensor Enable

Enable/Disable brake sensors

BRAKE SENSOR SIGNAL INVERT TAB

If you are using brake sensors from a different supplier, you can use this feature to set up your brake sensors as needed.

MOTOR TEMP

This is an advanced feature and requires a password from CYC to change. This allows you to disable your motor temperature sensor. Contact technical_support@cycmotor.com for more details.

BATTERY

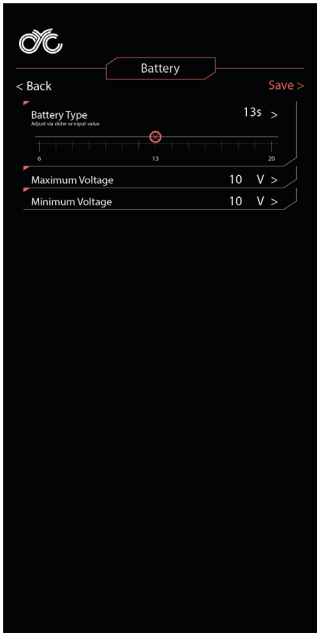

SERIES OF CELLS

10s = 36V, 14s = 52V, 20s = 72V

MAXIMUM VOLTAGE

The value the controller will fault when connecting too high a voltage to the system. An error will be triggered if a battery is too high of a voltage.

MINIMUM VOLTAGE

The value the controller will fault when connecting too low a voltage to the system. This setting can be used to protect your battery if too much voltage sag is detected.

© 2022 CYCMOTOR LTD
© 2022 CYCMOTOR LTD

Topology SW102
Display Guide

Contents

PRODUCT DETAILS 2

Product Name 2
Features 2
Dimensions & Materials 2
Materials 2
Dimensions 2
Electrical Specifications 3

QUICK START GUIDE 3

FUNCTIONALITIES 1

Power On/ Off 1
Navigation 1
Switch Dashboard 2
Assist Level Operating 2
Dark & Light Themed Dashboard ..... **Error! Bookmark not defined.**
Walk Assist 3
Settings 3
Clean Trip Data 4

ERROR CODES 4

INSTALLATION 5

Compatibility ..... **Error! Bookmark not defined.**
Pin Layout 5
Certification 5

The information contained in this document is derived from the TFT LCD Display Guide provided by Zhejiang Topology Intelligent Technology Co., Ltd. (otherwise known as Topology). All the information contained in this manual is published in good faith and for general information purpose only. Contact technical_support@cycmotor.com for further assistance.

TOPOLOGY SW102

Product Details

Product Name

Intelligent OLED display, model：SW102

Firmware: CYCMotor Ltd specific

Features

- Minimalist design and process
- High brightness, high contrast 1.3-inch monochromatic OLED screen
- Excellent outdoor design with IP65 waterproof
- Micro USB serial communication port, convenient for maintenance services
- Bluetooth function is optional and can be adapted for mobile phone app

Dimensions & Materials

Materials

Product shell – ABS + PC plastic
Transparent window – 2.5D Tempered glass

Dimensions

L 110mm x W 68.2mm x H 68mm

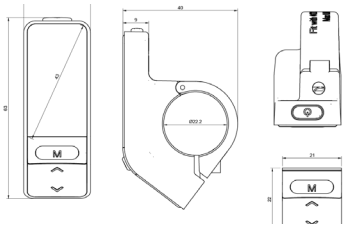

The information contained in this document is derived from the TFT LCD Display Guide provided by Zhejiang Topology Intelligent Technology Co., Ltd. (otherwise known as Topology). All the information contained in this manual is published in good faith and for general information purpose only. Contact technical_support@cycmotor.com for further assistance.

Electrical Specifications

- Power supply：DC 24V/36V/48V
- Rated current：12mA
- Shutdown leakage current：<1uA
- Screen specification： 1.3" OLED（64*128 dots）
- Communication method：UART (default)
- Operating temperature：-20°C ~ 60°C
- Storage temperature：-30°C ~ 80°C
- Waterproof level：IP65

Quick start guide

After unboxing and installing your CYC motor system, there are two main things you need to set up.

1. Change your Battery No. setting according to your rated voltage.

Within 15 seconds of turning on your display, long press the MENU button to enter the settings functions. Press UP/ DOWN to navigate the settings page & MENU to select.

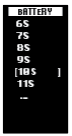

6s = 22.2V
7s = 25.9V
8s = 29.6V

9s = 33.3V
10s = 36V
11s = 40.7V

12s = 44.4V
13s = 48V
14s = 52V

*Please note that 6s to 9s is not compatible with the CYC systems. This will be removed in future batches. Our apologies for the confusion.

The information contained in this document is derived from the TFT LCD Display Guide provided by Zhejiang Topology Intelligent Technology Co., Ltd. (otherwise known as Topology). All the information contained in this manual is published in good faith and for general information purpose only. Contact technical_support@cycmotor.com for further assistance.

TOPOLOGY SW102

2. Change your Wheel setting according to your bike's wheel size.

3. Now, you can set things up like your temperature and speed unit as well as your brightness level. Otherwise, you're good to go!

Functionalities

Power On/ Off

Press and hold the POWER button for 2 second to turn the display on/ off. The display will automatically shut down when there is no operation for a period of time.

Navigation

The MENU button is used to go into your main settings page & your clear data page. It is also used to enter and select a setting or function.

1. POWER
2. MENU
3. UP
4. DOWN

The information contained in this document is derived from the TFT LCD Display Guide provided by Zhejiang Topology Intelligent Technology Co., Ltd. (otherwise known as Topology). All the information contained in this manual is published in good faith and for general information purpose only. Contact technical_support@cycmotor.com for further assistance.

TOPOLOGY SW102

Switch Dashboard

Switch the main dashboard to display different information by pressing the MENU button.

Assist Level Operating

Press the UP/ DOWN button to change the assist level between level 1, 2, and 3. Note that "OFF" means no motor assistance will be given.

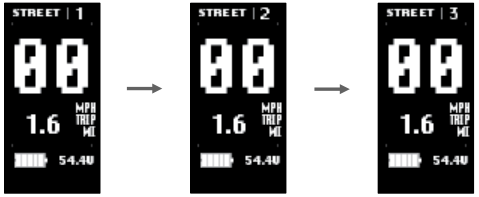

The information contained in this document is derived from the TFT LCD Display Guide provided by Zhejiang Topology Intelligent Technology Co., Ltd. (otherwise known as Topology). All the information contained in this manual is published in good faith and for general information purpose only. Contact technical_support@cycmotor.com for further assistance.

TOPOLOGY SW102

Walk Assist

Long press the DOWN button to activate walk assist. Note that it takes 3 seconds to activate & will deactivate immediately when the button is released.

Settings

Long press the MENU button within 15 seconds of switching on the display to enter the "Settings" page. Note that once the system has been activated for longer than 15 seconds, you will need to restart the motor system to enter the settings menu.

The information contained in this document is derived from the TFT LCD Display Guide provided by Zhejiang Topology Intelligent Technology Co., Ltd. (otherwise known as Topology). All the information contained in this manual is published in good faith and for general information purpose only. Contact technical_support@cycmotor.com for further assistance.

Clean Trip Data

Wait 15 seconds after starting up the motor system to be able to enter the “Clean Data” menu. Long press the MENU button to clear the previous trip data. Please note that the trip data does not automatically clear once you restart the motor system. This is a manual process.

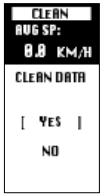

Error Codes

In certain circumstances, an error code may appear on your display. Contact technical_support@cycmotor.com for assistance. *TBC

The information contained in this document is derived from the TFT LCD Display Guide provided by Zhejiang Topology Intelligent Technology Co., Ltd. (otherwise known as Topology). All the information contained in this manual is published in good faith and for general information purpose only. Contact technical_support@cycmotor.com for further assistance.

TOPOLOGY SW102

Installation

1. Open the display lock clip, set the display in the left handlebar (standard handlebar sizeΦ22.2). Adjust it in place and tighten the screw accordingly.

Note: **Damage caused by excessive torque is not covered by the warranty.**

Pin Layout

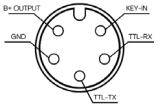

1. Red wire : Anode(36V to 72V)
2. Black wire : GND
3. Yellow wire : TxD (display -> controller)
4. Green wire : RxD (controller -> display)
5. Blue wire : Power cord to the controller

Certification

CE / IP65 (waterproof) / ROHS.

Be sure to contact technical_support@cycmotor.com if further assistance is needed.

THANK YOU!

The information contained in this document is derived from the TFT LCD Display Guide provided by Zhejiang Topology Intelligent Technology Co., Ltd. (otherwise known as Topology). All the information contained in this manual is published in good faith and for general information purpose only. Contact technical_support@cycmotor.com for further assistance.

Topology DS103 Display Guide

Contents

PRODUCT DETAILS 2
- PRODUCT NAME 2
- FEATURES 2
- DIMENSIONS & MATERIALS 2
  - *Materials* 2
  - *Dimensions* 2
- ELECTRICAL SPECIFICATIONS 3

QUICK START GUIDE 4

FUNCTIONALITIES 1
- POWER ON/ OFF 1
- NAVIGATION 1
- SWITCH DASHBOARD 1
- ASSIST LEVEL OPERATING 2
- DARK & LIGHT THEMED DASHBOARD 2
- WALK ASSIST 3
- SETTINGS 3
- CLEAN TRIP DATA 4

ERROR CODES 4

INSTALLATION 4
- COMPATIBILITY 5
- PIN LAYOUT 5
- CERTIFICATION 6

The information contained in this document is derived from the TFT LCD Display Guide provided by Zhejiang Topology Intelligent Technology Co., Ltd. (otherwise known as Topology). All the information contained in this manual is published in good faith and for general information purpose only. Contact technical_support@cycmotor.com for further assistance.

TOPOLOGY DS103

Product Details

Product Name

Intelligent LCD display, model：DS103

Firmware: CYCMotor Ltd specific

Features

- Simple and lightweight, separate installation bracket design
- High brightness, high contrast 3.5 inch coloured TFT screen
- Clock function (clock is on when the display shutdown)
- Excellent outdoor design with IP65 level waterproof
- Micro USB serial communication port, convenient maintenance services.

Dimensions & Materials

Materials
Product shell – ABS + PC plastic
Transparent window – Tempered glass

Dimensions
L 110mm x W 68.2mm x H 68mm

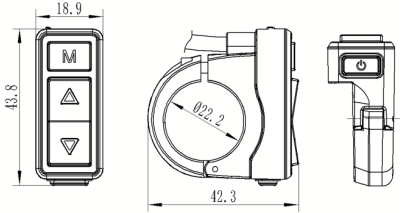

The information contained in this document is derived from the TFT LCD Display Guide provided by Zhejiang Topology Intelligent Technology Co., Ltd. (otherwise known as Topology). All the information contained in this manual is published in good faith and for general information purpose only. Contact technical_support@cycmotor.com for further assistance.

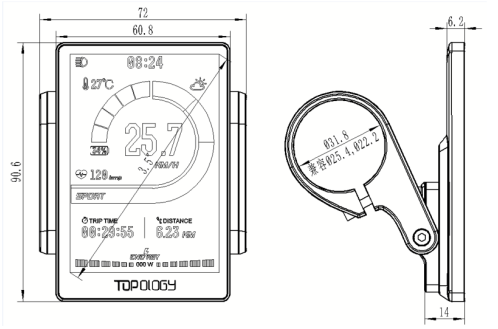

Electrical Specifications

- Power supply：DC 24V/36V/48V/ 52V
- Rated current：30ma/36V
- Shutdown leakage current：<1uA
- Screen specification： 3.5" colored TFT（480*320pixels）
- Communication method：UART (default)
- Operating temperature：-20°C ~ 60°C
- Storage temperature：-30°C ~ 80°C
- Waterproof level：IP65

The information contained in this document is derived from the TFT LCD Display Guide provided by Zhejiang Topology Intelligent Technology Co., Ltd. (otherwise known as Topology). All the information contained in this manual is published in good faith and for general information purpose only. Contact technical_support@cycmotor.com for further assistance.

TOPOLOGY DS103

Quick start guide

After unboxing and installing your CYC motor system, there are two main things you need to set up.

1. Change your Battery No. setting according to your rated voltage.

Within 15 seconds of turning on your display, long press the MENU button to enter the settings functions. Press UP/ DOWN to navigate the settings page & MENU to select.

6s = 22.2V
7s = 25.9V
8s = 29.6V

9s = 33.3V
10s = 36V
11s = 40.7V

12s = 44.4V
13s = 48V
14s = 52V

*Please note that 6s to 9s is not compatible with the CYC systems. This will be removed in future batches. Our apologies for the confusion.

2. Change your Wheel setting according to your bike's wheel size.

3. Now, you can set things up like your temperature and speed unit as well as your brightness level. Otherwise, you're good to go!

The information contained in this document is derived from the TFT LCD Display Guide provided by Zhejiang Topology Intelligent Technology Co., Ltd. (otherwise known as Topology). All the information contained in this manual is published in good faith and for general information purpose only. Contact technical_support@cycmotor.com for further assistance.

Functionalities

Power On/ Off

Press and hold the POWER button for 3 seconds to turn the display on/ off.

Navigation

The MENU button is used to go into your main settings page & your clear data page. It is also used to enter and select a setting or function.

1. POWER
2. MENU
3. UP
4. DOWN

Switch Dashboard

Switch the main dashboard to display different information by pressing the MENU button.

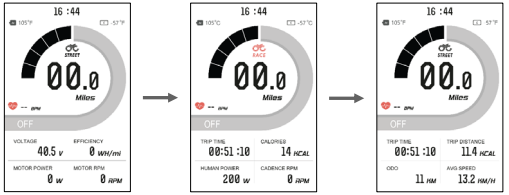

The information contained in this document is derived from the TFT LCD Display Guide provided by Zhejiang Topology Intelligent Technology Co., Ltd. (otherwise known as Topology). All the information contained in this manual is published in good faith and for general information purpose only. Contact technical_support@cycmotor.com for further assistance.

TOPOLOGY DS103

Assist Level Operating

Press the UP/ DOWN button to change the assist level between level 1, 2, and 3. Note that "OFF" means no motor assistance will be given.

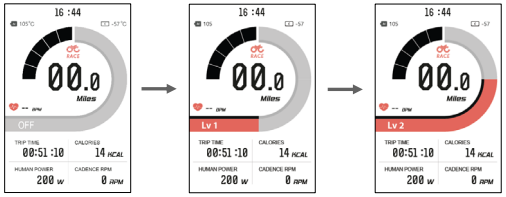

Dark & Light Themed Dashboard

Long press the UP button to switch between light and dark themed dashboard.

The information contained in this document is derived from the TFT LCD Display Guide provided by Zhejiang Topology Intelligent Technology Co., Ltd. (otherwise known as Topology). All the information contained in this manual is published in good faith and for general information purpose only. Contact technical_support@cycmotor.com for further assistance.

Walk Assist

Hold in the DOWN button to activate walk assist. Note that it takes 3 seconds to activate & will deactivate immediately when the button is released.

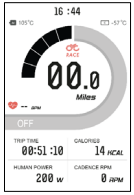

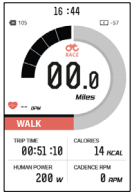

Settings

Long press the MENU button within 15 seconds of switching on the display to enter the “Settings” page. Note that once the system has been activated for longer than 15 seconds, you will need to restart the motor system to enter the settings menu.

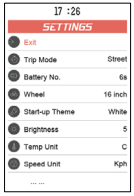

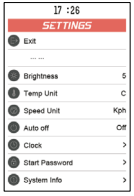

The information contained in this document is derived from the TFT LCD Display Guide provided by Zhejiang Topology Intelligent Technology Co., Ltd. (otherwise known as Topology). All the information contained in this manual is published in good faith and for general information purpose only. Contact technical_support@cycmotor.com for further assistance.

TOPOLOGY DS103

Clean Trip Data

Wait 15 seconds after starting up the motor system to enter the “Clean Data” menu. Long press the MENU button to clear the previous trip data. Please note that the trip data does not automatically clear once you restart the motor system. This is a manual process.

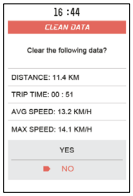

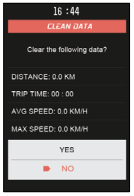

Error Codes

In certain circumstances, an error code may appear on your display. Contact technical_support@cycmotor.com for assistance. *Error codes TBC

Installation

1. Determine if you need to select the corresponding mounting clamp and rubber clip ring according to the diameter of your handlebar (Applicable handlebar specifications：Φ22.2 ； Φ25.4 ； Φ31.8).
2. Open the display lock clamp and insert the rubber clip (if applicable) into the correct position of the lock clamp.
3. Set the rubber ring in the bracket (if applicable) then assemble on the middle of the handlebar. You can adjust the angle of the display to make the display screen more visible when riding. After fixing the angle, tighten the screws. Tightening torque is 1N.m.
4. Open the lock ring of the switch and set it in the appropriate position on the left side of the handlebar. Adjust the angle and position of the switch as needed in order to ensure that you can operate the switch easily.

The information contained in this document is derived from the TFT LCD Display Guide provided by Zhejiang Topology Intelligent Technology Co., Ltd. (otherwise known as Topology). All the information contained in this manual is published in good faith and for general information purpose only. Contact technical_support@cycmotor.com for further assistance.

5. Fix and tighten the handlebar fixing screw with M3Hex wrench (locking torque is 0.8Nm).
6. Connect the display connector to the controller connector according to the label.

Note: **Damage caused by excessive torque is not covered by the warranty.**

Compatibility

The clamps are suitable for 3x different handlebar sizes: 31.8mm, 25.4mm, and 22.2mm.

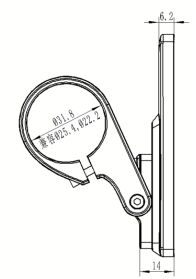

Pin Layout

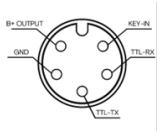

1. Red wire : Anode(36V to 72V)
2. Black wire : GND
3. Yellow wire : TxD (display -> controller)
4. Green wire : RxD (controller -> display)
5. Blue wire : Power cord to the controller

The information contained in this document is derived from the TFT LCD Display Guide provided by Zhejiang Topology Intelligent Technology Co., Ltd. (otherwise known as Topology). All the information contained in this manual is published in good faith and for general information purpose only. Contact technical_support@cycmotor.com for further assistance.

TOPOLOGY DS103

Certification

CE / IP65 (waterproof) / ROHS.

Be sure to contact technical_support@cycmotor.com if further assistance is needed.

THANK YOU!

The information contained in this document is derived from the TFT LCD Display Guide provided by Zhejiang Topology Intelligent Technology Co., Ltd. (otherwise known as Topology). All the information contained in this manual is published in good faith and for general information purpose only. Contact technical_support@cycmotor.com for further assistance.

STEP 1

Once your motor is fully installed and peripherals connected, set up your battery voltage and your wheel size. You can do this via the CYC Ride Control app or via your SW102 or DS103 display.

For the 750c display, you need to set this up via the CYC Ride Control app **and** on the display itself.

STEP 2

Test run and have fun! Use responsibly.

06 MAINTENANCE

You are advised to regularly maintain, clean and check the status of the bike and motor system as dirt will accumulate throughout the rides and additional strain will be taken by the drive train due to the powerful motor system. We recommend that users should inspect the bike and motor condition before and after each ride.

Disconnect all power supplies from the drive unit before starting any work (e.g., inspection, repair of the bike, maintenance work etc,) on the bike, transportation or sotrage. Unintentional activation of the drive could lead to serious damage or injury.

Never reach into the chains, gears or any moving parts while the bike is still in operation.

As the drive unit can get hot after use, be sure to give it some time to cool down before performing any maintenance.

Store the bike in a cool and dry place, sheltered from direct sunlight and potential rain.

Do not attempt to disassemble or modify the drive unit. The drive unit may only be repaired and maintained by qualified experts and only replaced with original spare parts. This will ensure that the safety/warranty of the drive unit is maintained.

The active moving parts (e.g., chain, gear, speed reducer etc.) should be regularly lubricated to maintain desired performance. In case of any abnormal activity, stop using the drive unit immediately and contact your CYC dealer.

Do not attempt to replace the X1 PRO parts with the parts that have been found at a local bicycle store as the materials used in the drive unit are specifically designed for their purposes.

All bolts, nuts and screws are required to be tightened to the correct torque, if there is anything loose, stay off the bike. Torque specifications for each bolt and nut is provided below.

07 TERMS & CONDITIONS

Warranty

This product has a 2-year warranty period. Man-made failures are excluded from warranty. Terms and conditions apply. Please visit www.cycmotor.com/refund-and-return-policy for more information.

For any queries or complains, please contact us directly at support@cycmotor.com or visit our online store for replacement parts at www.cycmotor.com/shop.

Purchases from a CYC dealer

CYC authorized dealers may have different terms and conditions. If you are experiencing any issues with your item/s and did not purchase the kit directly from us, kindly consult the appropriate dealer. Thank you.

Contact Information

support@cycmotor.com

For customer support, including
- shipping;
- quotes,
- tax, and
- sales

technical_support@cycmotor.com

For technical support, including
- build assistance;
- recommendations;
- troubleshooting, and
- product related queries

Office Hours
Monday to Friday
9am - 6pm
Hong Kong Time
Tel: +852 3690 8938